REV	DATE	DESCRIPTION	APPROVED
A	9-14-01	UPDATED ANT'A & ENG INSTL	E0XXXX
B	1-29-02	ADDED AFT COWL, REV'D COOLING SYS	E08403

MAIN ROTOR:
DIAM = 23.0′
# BLADES = 2
CHORD = 0.563′
AIRFOIL = ATI-12
TWIST = -6.81 DEG
RPM = 545

TAIL ROTOR:
DIAM = 2.5′
# BLADES = 4
CHORD = .1666′
AIRFOIL = NACA 0012-34
TWIST = 0 DEG
RPM = 5172.7

HORIZONTAL STABILIZER:
SPAN = 3.75′
CHORD = 1.0′
AIRFOIL = CLARK-Y
INCIDENCE = -4 DEG
ASPECT RATIO, EFFECTIVE = 5.5

VERTICAL STABILIZER:
SPAN = 1.33′
CHORD, MID = 1.13′
CHORD, TIP = .58′
AIRFOIL = FLAT PLATE, 1/2″ THK
INCIDENCE = 5 DEG NOSE RIGHT
SWEEP, MID CHORD, UPPER = 16 DEG
SWEEP, MID CHORD, LOWER = 28.5 DEG
AREA = 2 X 1.16 SQ FT
ASPECT RATIO =1.57

RING TAIL:
AIRFOIL = FLAT PLATE, 1.0″ THK
AREA = 3.9 SQ FT

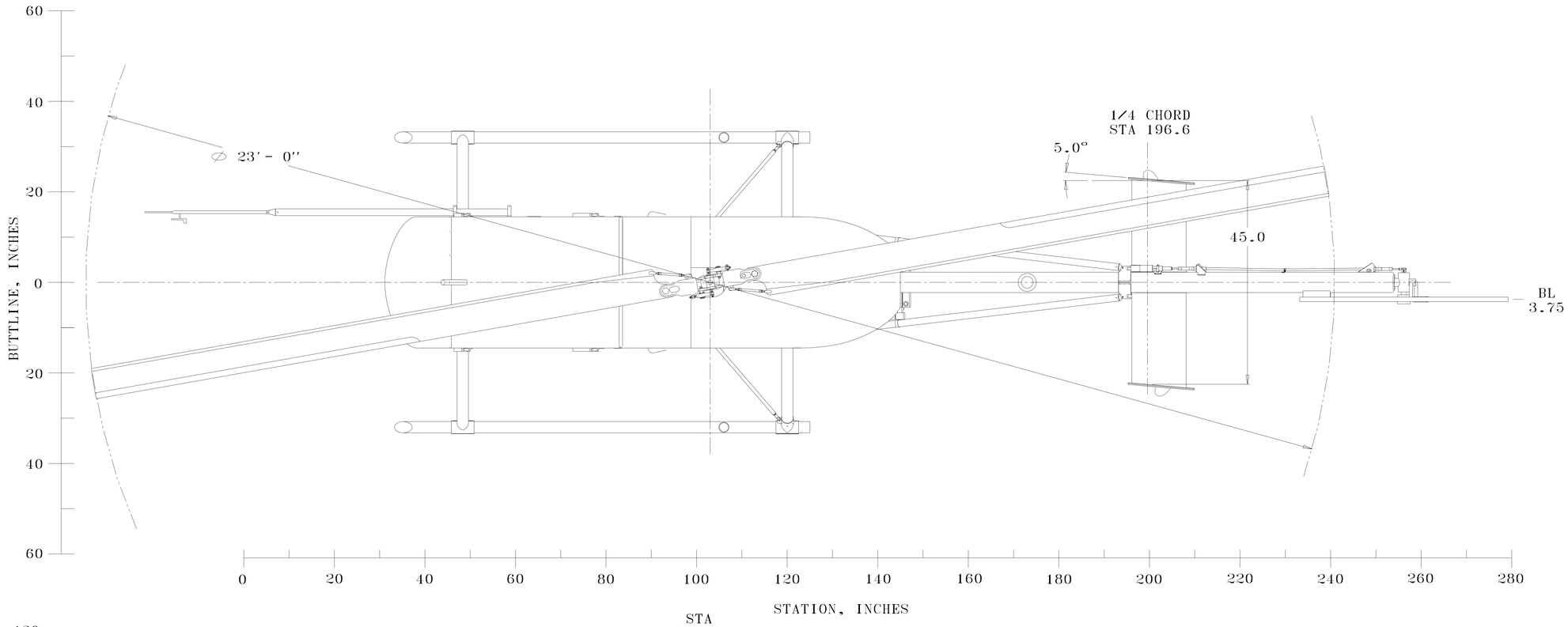

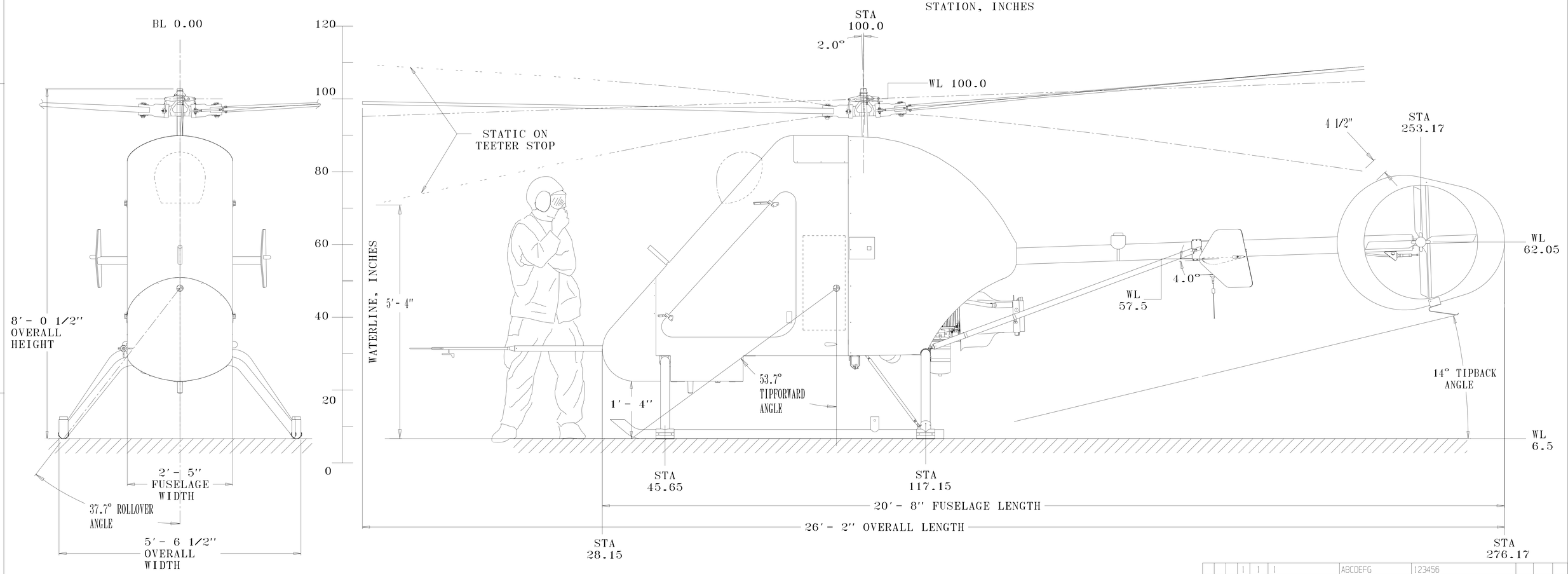

QTY	QTY	QTY	ITEM NO.	PART OR IDENTIFYING NUMBER	NOMENCLATURE OR DESCRIPTION	MATERIAL AND SPECIFICATIONS	HEAT TREAT	FINISH	ZONE
		1	1	1	ABCDEFG	123456			

⇐ ASS'Y — LIST OF MATERIAL

MODEL NO. 292 — CHARGE NO. AB177-203

DIMENSIONING & TOLERANCING PER ANSI Y14.5

UNLESS OTHERWISE SPECIFIED, DIMENSIONS ARE IN INCHES
TOLERANCES: ANGLES ±.5°
DECIMALS .XX ±.02
DECIMALS .XXX ±.005
RIVET & BOLT EDGE MARGIN ±.05
BEND RADII ±.01 OR .03 & .05
±.03 ON .00 & GREATER
SURFACE FINISH
DIMENSIONS & SURFACE TEXTURE DESIGNATION APPLY BEFORE PLATING OR FINISH COATING

	APPROVAL	DATE
DRWN	McGONIGLE	8-1-01
CHK		
STRESS		
ENGR	McGONIGLE	
APPR		
DWG DATE	8-1-01	

ADVANCED TECHNOLOGIES INCORPORATED
875 Middle Ground Boulevard • Newport News, Virginia 23606

GENERAL ARRANGEMENT
VIGILANTE UAV

SIZE E — DWG NO. 292-0001
SCALE 1/10 — REV B — SHEET 1 OF 1

PART NO.	NEXT ASS'Y	USED ON
APPLICATION		